INDUCTION LOOP TEST RESULTS

Location _____ Date _____

Tested By _____ Verified By _____

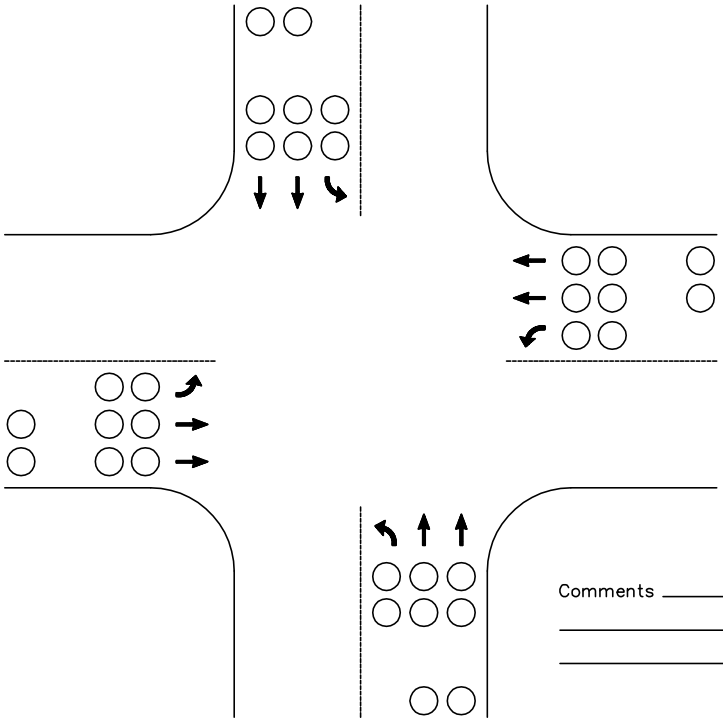

Comments _____

TEST RESULTS						TEST RESULTS					
Loop #	Inductance	Meggar Reading	Loop #	Inductance	Meggar Reading	Loop #	Inductance	Meggar Reading	Loop #	Inductance	Meggar Reading

DRAWING NUMBER	SL-340-1
SCALE	NONE
REVISION DATE	12/16
DEPARTMENT	TRANS

INDUCTION LOOP TEST

City of Bellevue

CITY OF BELLEVUE WASHINGTON